1 BACKFLOW PREVENTING DEVICE — NTS

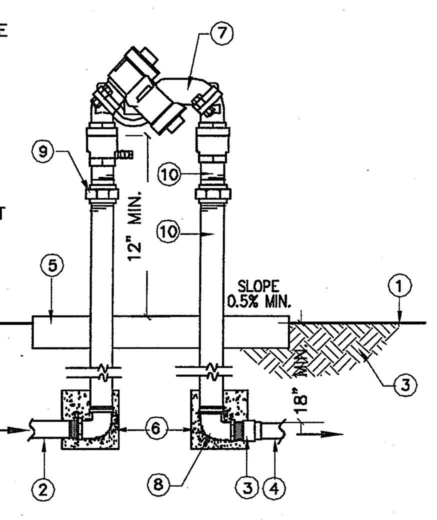

1. FINISHED GRADE / SURFACE
2. COPPER SUPPLY LINE
3. PVC ADAPTER
4. PVC MAINLINE
5. 4" THICK CONCRETE PAD
6. 1.5 CU. FT. CONCRETE STABILIZER
7. BACKFLOW PREVENTER UNIT
8. BRASS ELL
9. BRASS UNION (2 REQ'D)
10. BRASS RISER

NOTES

1. VERIFY EXACT LOCATION OF BACKFLOW DEVICE WITH THE OWNER'S REPRESENTATIVE PRIOR TO INSTALLATION.

2 GATE VALVE — NTS

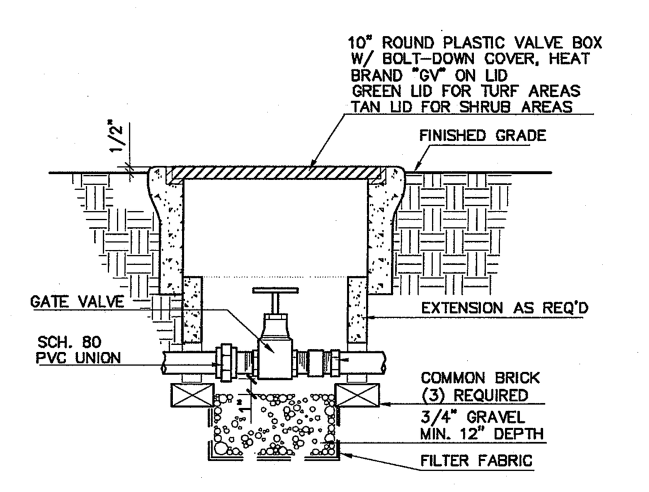

3 REMOTE CONTROL VALVE — NTS

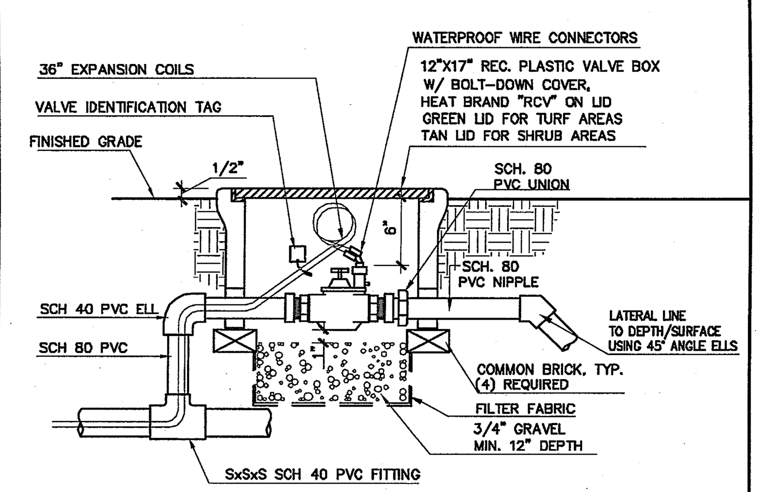

4 QUICK COUPLER VALVE — NTS

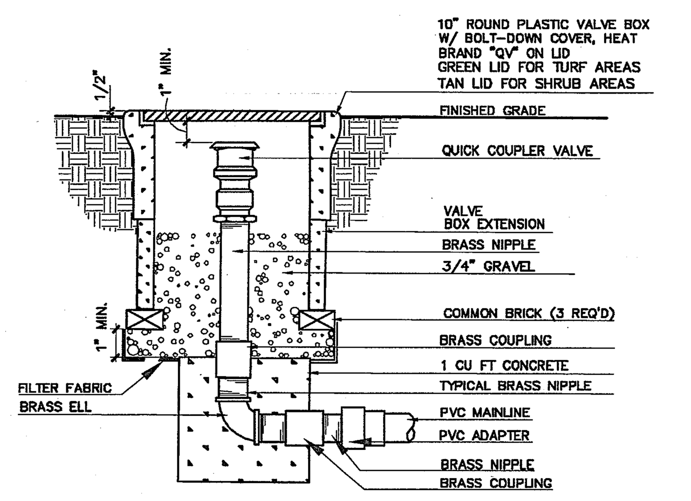

5 TRENCHING UNDER PAVING — NTS

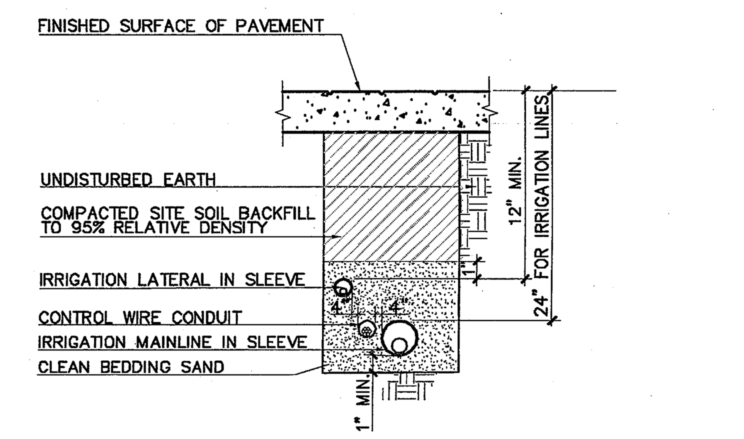

NOTES:

1. VERIFY LOCATIONS OF EXISTING UNDERGROUND FACILITIES BY HAND DIGGING POTHOLES.
2. ALL PIPE UNDER PAVING SHALL BE SLEEVED, UNLESS OTHERWISE NOTED.

6 IRRIGATION CONTROLLER — NTS

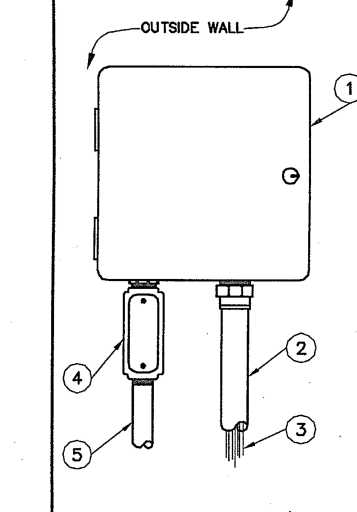

1. OUTDOOR WALL MOUNT IRRIGATION CONTROLLER
2. PVC SCH 40 CONDUIT AND FITTINGS
3. WIRES TO REMOTE CONTROL VALVES
4. JUNCTION BOX
5. ELECTRICAL CONDUIT AND FITTINGS TO POWER SUPPLY

NOTES

1. VERIFY EXACT LOCATION OF CONTROLLER WITH THE OWNER'S REPRESENTATIVE PRIOR TO INSTALLATION.
2. CONTRACTOR SHALL COORDINATE WITH ELECTRICAL PLANS FOR 120VAC POWER SUPPLY TO LOCATION OF PROPOSED IRRIGATION CONTROLLER SHOWN ON PLAN.
3. ALL ELECTRICAL WORKS SHALL BE IN ACCORDANCE WITH LOCAL AND REGIONAL GOVERNING CODES.

7 MASTER VALVE AND FLOW METER — NTS

NOTE:
REFER TO MANUFACTURER'S GUIDELINES AND SPECIFICATIONS FOR ADDITIONAL INFORMATION.

* HEAT BRAND "MV" ON LID – MASTER VALVE
HEAT BRAND "FS" ON LID – FLOW SENSOR

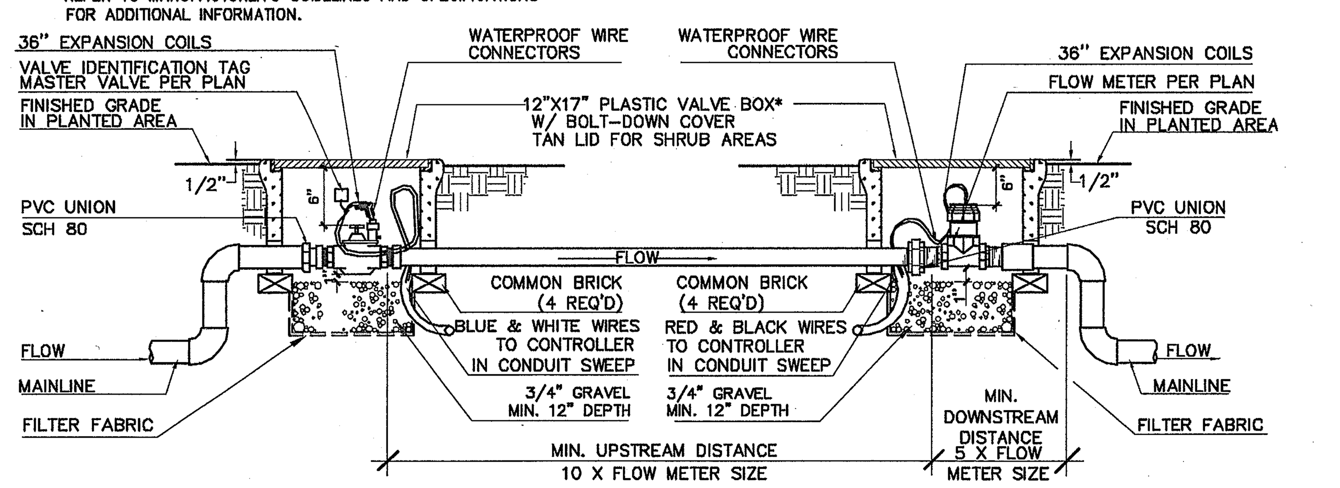

8 POP-UP SPRAY ASSEMBLY W/ LITTLE VALVE — NTS

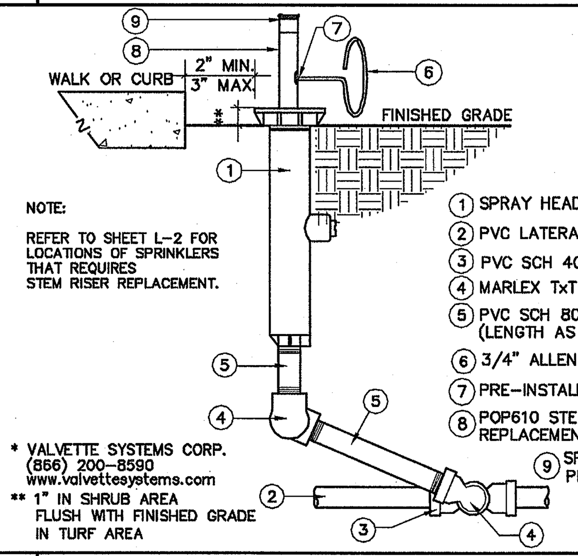

NOTE:
REFER TO SHEET L-2 FOR LOCATIONS OF SPRINKLERS THAT REQUIRES STEM RISER REPLACEMENT.

1. SPRAY HEAD
2. PVC LATERAL PIPE
3. PVC SCH 40 TEE OR ELL
4. MARLEX TxT STREET ELL
5. PVC SCH 80 NIPPLE (LENGTH AS REQUIRED)
6. 3/4" ALLEN WRENCH*
7. PRE-INSTALLED LITTLE VALVE*
8. POP610 STEM RISER REPLACEMENT*
9. SPRAY NOZZLE PER LEGEND

* VALVETTE SYSTEMS CORP. (866) 200-8590 www.valvettesystems.com
** 1" IN SHRUB AREA FLUSH WITH FINISHED GRADE IN TURF AREA

9 POP-UP SPRAY/ROTOR ASSEMBLY — NTS

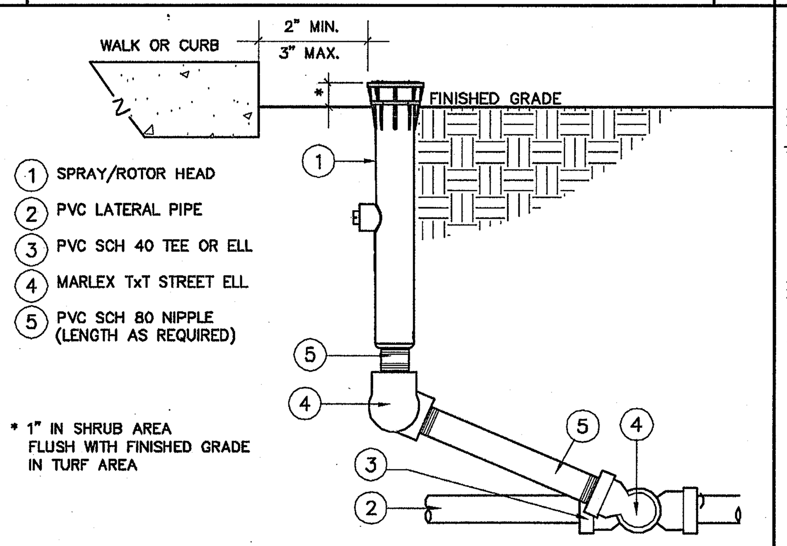

1. SPRAY/ROTOR HEAD
2. PVC LATERAL PIPE
3. PVC SCH 40 TEE OR ELL
4. MARLEX TxT STREET ELL
5. PVC SCH 80 NIPPLE (LENGTH AS REQUIRED)

* 1" IN SHRUB AREA FLUSH WITH FINISHED GRADE IN TURF AREA

10 PRESSURE REGULATOR & WYE STRAINER — NTS

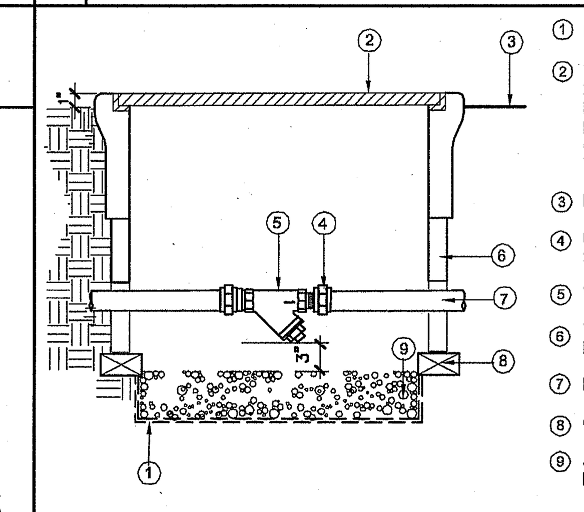

1. FILTER FABRIC
2. 12"X17" RECTANGULAR PLASTIC VALVE BOX W/ BOLT-DOWN COVER. HEAT BRAND "WS" ON LID. GREEN LID FOR TURF AREA. TAN LID FOR SHRUB AREA
3. FINISHED GRADE
4. UNION (2 REQ'D) SCH 80 PVC
5. WYE STRAINER
6. VALVE BOX EXTENSION AS NEEDED
7. PRESSURE MAINLINE
8. COMMON BRICK (4 REQ'D)
9. 3/4" GRAVEL, MIN. 12" DEPTH

11 LINE FLUSHING VALVE — NTS

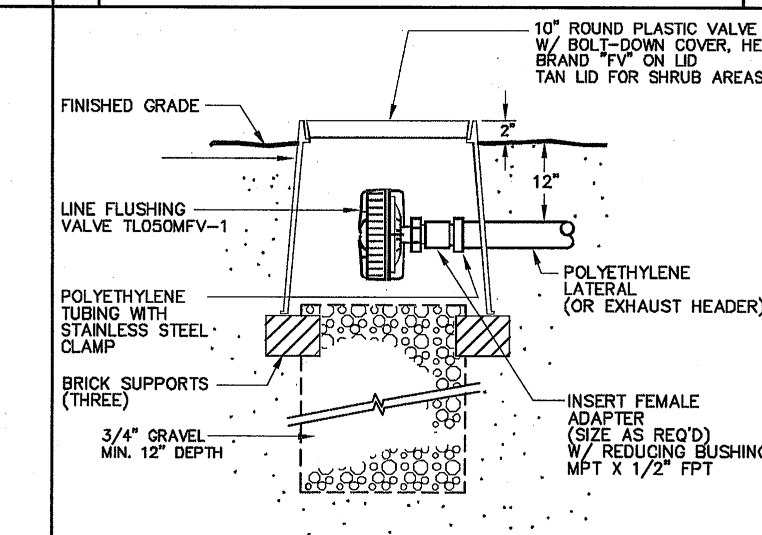

12 CONTROL ZONE KIT — NTS

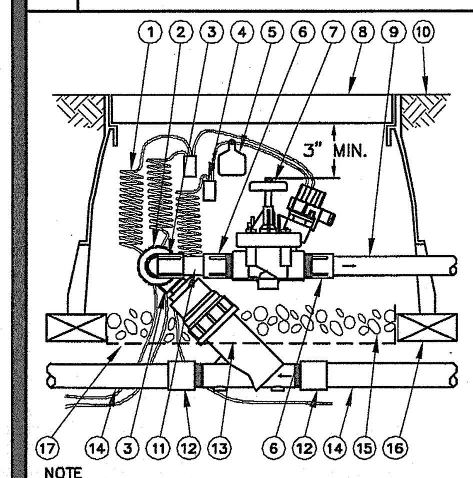

1. 30-INCH LINEAR LENGTH OF WIRE, COILED
2. 3/4-INCH PVC SCH 40 UNION
3. 3/4-INCH PVC SCH 40 EL (1 OF 2)
4. WATERPROOF CONNECTION (1 OF 2)
5. ID TAG
6. 3/4-INCH PVC SCH 40 REDUCING MALE ADAPTER (1 OF 2)
7. REMOTE CONTROL VALVE: RAIN BIRD MODEL PESB
8. 12"X17" PLASTIC VALVE BOX W/ BOLT-DOWN COVER TAN LID FOR SHRUB AREAS HEAT BRAND "RCV" ON LID
9. PVC PIPE TO DISCHARGE POINT
10. TOP OF MULCH
11. 3/4-INCH PVC PIPE (3-INCH LENGTH)
12. 1-INCH PVC SCH 40 MALE ADAPTER (1 OF 2)
13. 1-INCH RAIN BIRD Y-FILTER
14. PVC MAINLINE
15. 3/4" GRAVEL MIN. 12" DEPTH
16. BRICK (1 OF 4)
17. FILTER FABRIC

NOTE
DRIP CONTROL ZONE KIT IS COMPRISED OF Y-FILTER, REMOTE CONTROL VALVE, 3/4-INCH UNION, 2½-INCH ELLS, AND 1"x 3/4" REDUCING MALE ADAPTER.

13 DRIP IRRIGATION LAYOUT — NTS

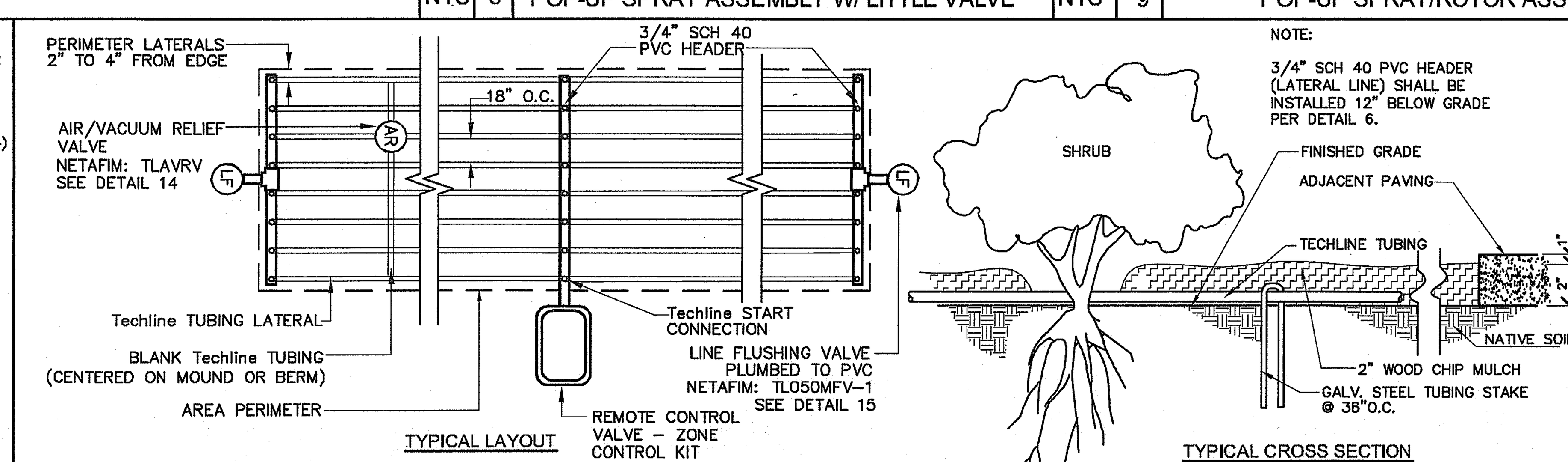

NOTE:
3/4" SCH 40 PVC HEADER (LATERAL LINE) SHALL BE INSTALLED 12" BELOW GRADE PER DETAIL 6.

14 AIR/VACUUM RELIEF VALVE

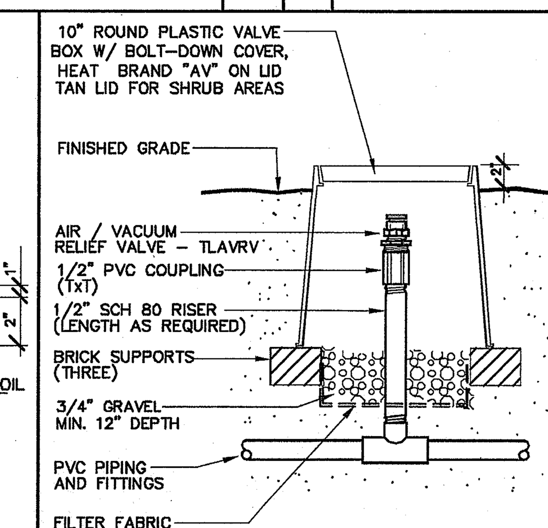

15 SPLICE BOX — NTS

NOTE:
PROVIDE 36" WIRE EXPANSION LOOPS.

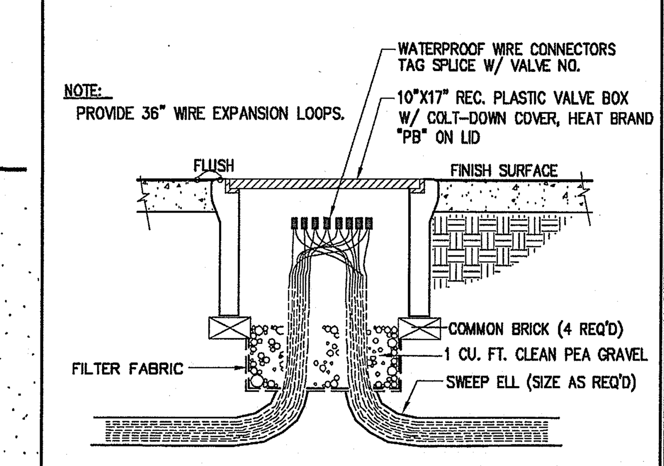

16 IRRIGATION LINE TRENCHING — NTS

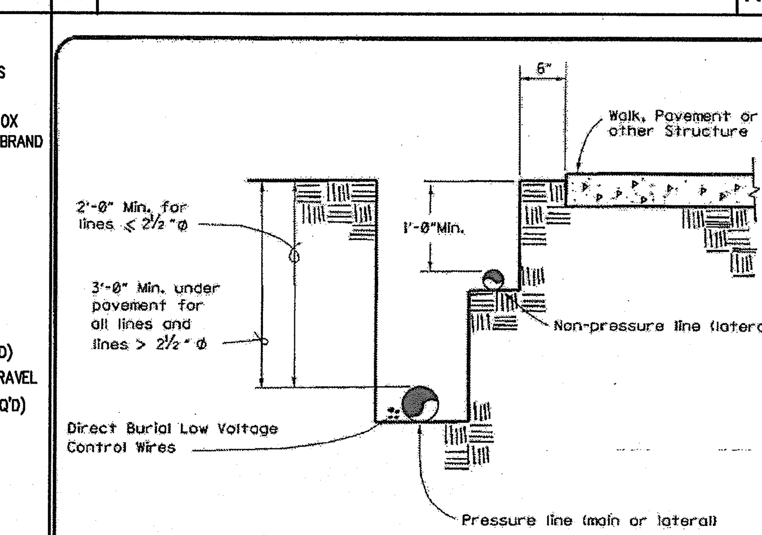

NOTES:

1. Trenching and backfilling shall be per Standard Specifications.
2. Minimum backfill relative compaction shall be 90%.
3. Bundle control wires together and tape to pipe at 10 foot intervals.

ORANGE COUNTY RESOURCES & DEVELOPMENT MANAGEMENT DEPARTMENT — Approved H. I. Nakasone, Chief Engineer — Adopted: Res. 78-791 Revised: Res. 79-1725; 06-010 — STD. PLAN 1760 — SHT. 1 OF 1
IRRIGATION LINE TRENCHING

17 RAIN SENSOR — NTS

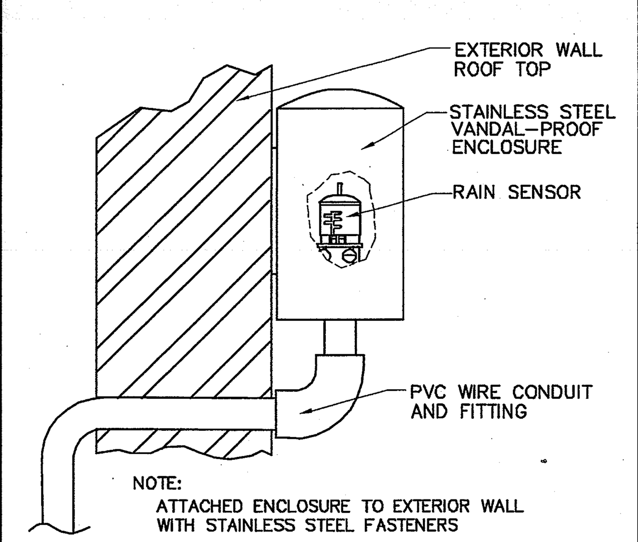

NOTE:
ATTACHED ENCLOSURE TO EXTERIOR WALL WITH STAINLESS STEEL FASTENERS

18 TREE PLANTING AND STAKING — NTS

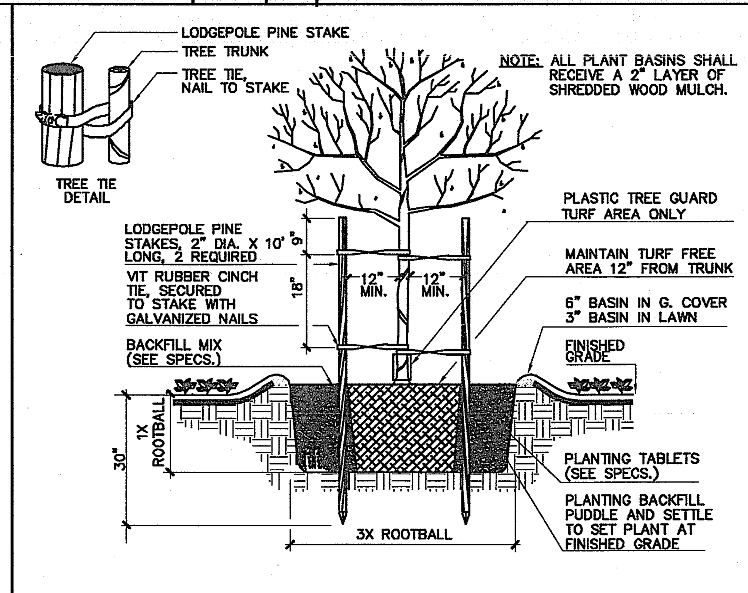

NOTE: ALL PLANT BASINS SHALL RECEIVE A 2" LAYER OF SHREDDED WOOD MULCH.

19 ROOT CONTROL BARRIER — NTS

NOTE:
THIS DETAIL IS FOR INSTALLATION OF ROOT BARRIE. FOR TREE INSTALLATION, REFER TO TREE PLANTING & STAKING DETAIL.

NOTES:

1. TOP OF ROOT CONTROL BARRIER MUST BE AT GRADE.
2. POSITION ROOT CONTROL BARRIER ADJACENT TO STRUCTURE.
3. RAISED ROOT DEFLECTORS MUST BE FACING PLANTED AREA.
4. PROVIDE A MIN. OF 12 FEET OF ROOT BARRIER PER TREE.
5. ROOT BARRIER SHALL BE A MIN. OF 24" BELOW GRADE.
6. ROOT BARRIER SHALL BE MANUFACTURED BY "NDS" OR "DEEP ROOT".

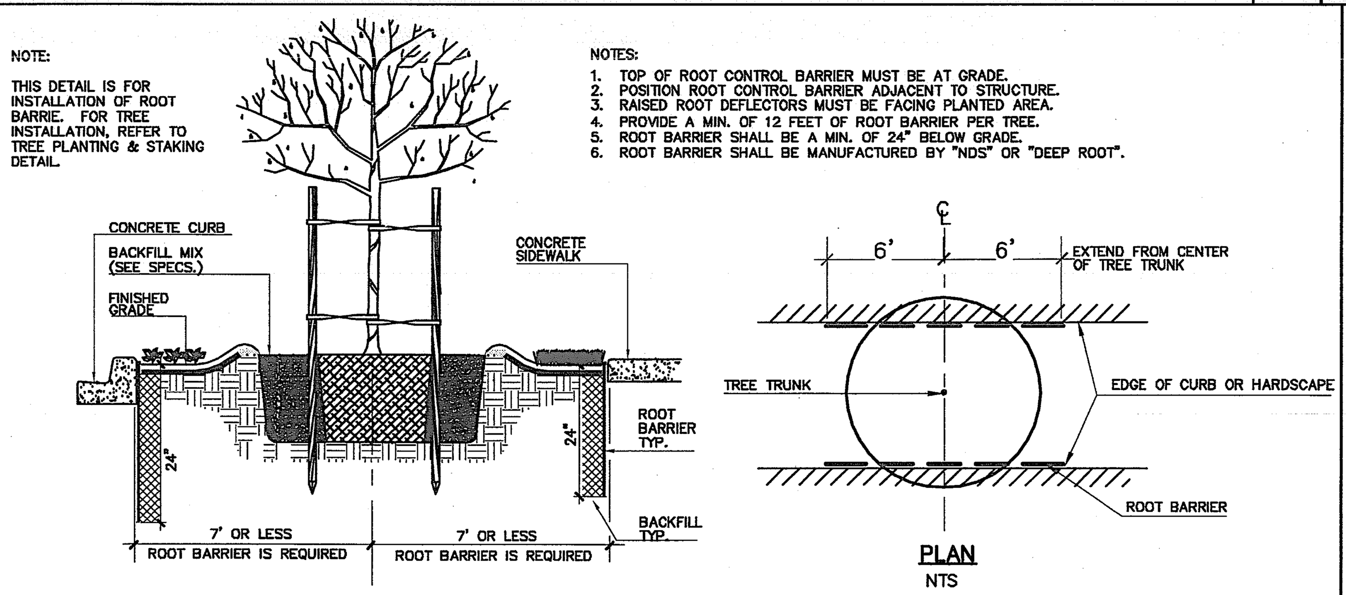

20 TYPICAL SHRUB & GROUNDCOVER PLANTING LAYOUT — NTS

1. LOCATE PLANTS WITH AN EQUAL ON-CENTER SPACING AS INDICATED ON THE DRAWINGS.
2. FULL CENTER SPACING ALONG WALKS OR WALL EDGES.
3. PAVING OR R/W SHOWING PLANTING AREA LIMIT.

NOTE:
ALIGN PLANT SPACING ROW LAYOUT PARALLEL TO WALK OR FENCE.

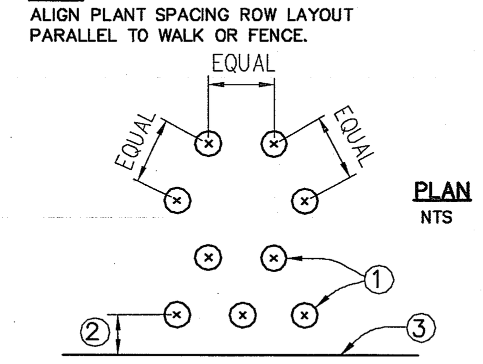

21 VINE PLANTING ON "GREEN SCREEN" — NTS

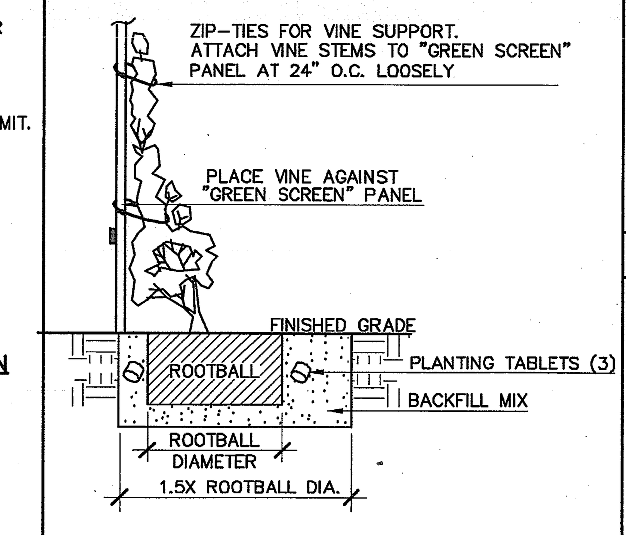

22 SHRUB PLANTING — NTS

NOTE:
LOCATE PLANTS PER SPACING AS INDICATED ON THE DRAWINGS.

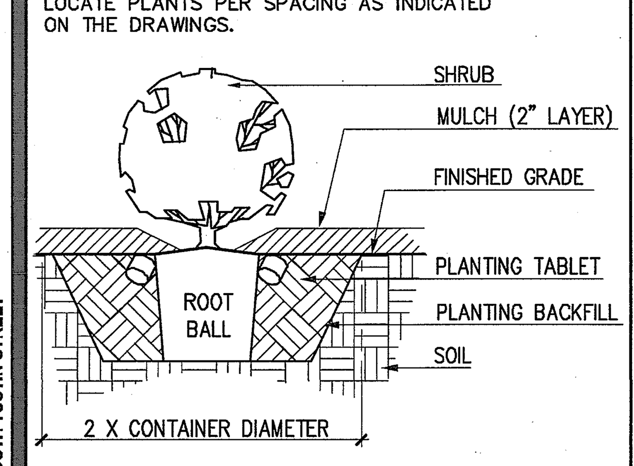

23 GARDEN SEATWALL — NTS

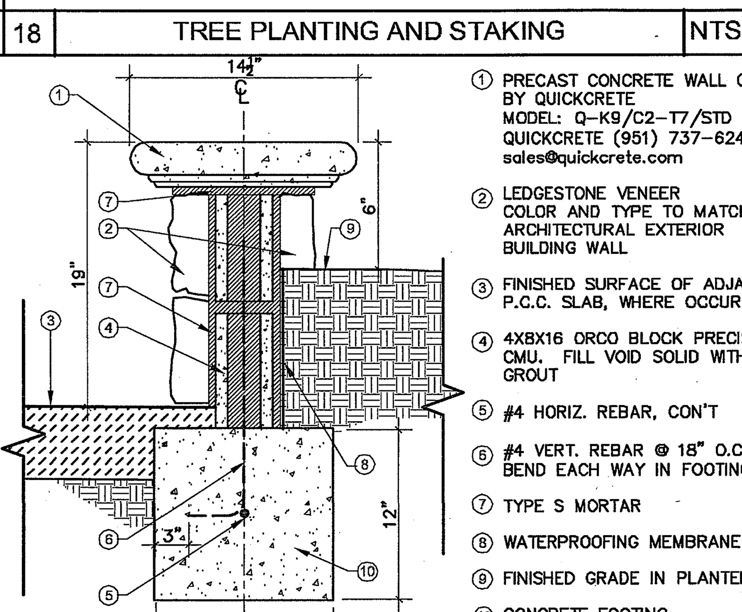

1. PRECAST CONCRETE WALL CAP BY QUICKCRETE MODEL: Q-K9/C2-T7/STD QUICKCRETE (951) 737-6240 sales@quickcrete.com
2. LEDGESTONE VENEER COLOR AND TYPE TO MATCH ARCHITECTURAL EXTERIOR BUILDING WALL
3. FINISHED SURFACE OF ADJACENT P.C.C. SLAB, WHERE OCCURS
4. 4X8X16 ORCO BLOCK PRECISION CMU. FILL VOID SOLID WITH GROUT
5. #4 HORIZ. REBAR, CON'T
6. #4 VERT. REBAR @ 18" O.C., BEND EACH WAY IN FOOTING
7. TYPE S MORTAR
8. WATERPROOFING MEMBRANE
9. FINISHED GRADE IN PLANTER
10. CONCRETE FOOTING

NOTES

1. CONTRACTOR SHALL SUBMIT SAMPLE OR MANUF'S CUT SHEET OF PRECAST CONCRETE CAP TO ENGINEER FOR APPROVAL PRIOR TO CONSTRUCTION.
2. VERIFY LEDGESTONE VENEER WITH ENGINEER PRIOR TO INSTALLATION.
3. VERIFY GARDEN SEATWALL LAYOUT WITH ENGINEER PRIOR TO CONSTRUCTION.
4. P.C.C. FOR CONCRETE FOOTING SHALL BE 330-C-23 (560-C-3250) WITH A 4" MAX. SLUMP. FLY ASH SHALL NOT BE USED.

24 CONCRETE MOW CURB — NTS

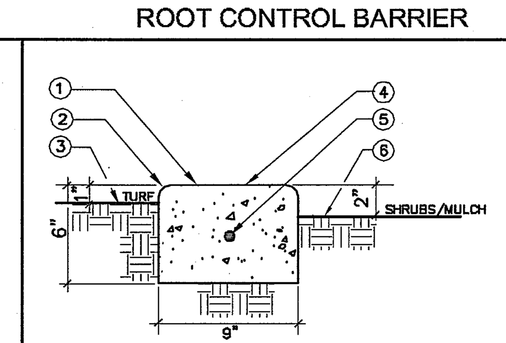

1. EXPANSION JOINTS 20' O.C., TOOLED JOINTS 5' O.C.
2. 1/2" RADIUS TYP.
3. FINISHED GRADE @ LAWN AREA
4. NATURAL COLOR CONCRETE WITH SMOOTH TROWEL FINISH
5. #4 REBAR CONT.
6. FINISHED GRADE @ PLANTING AREA

NOTE
P.C.C. FOR CONCRETE MOW CURB SHALL BE 330-C-23 (560-C-3250) WITH A 4" MAX. SLUMP. FLY ASH SHALL NOT BE USED.

25 FLAGSTONE PAVING — NTS

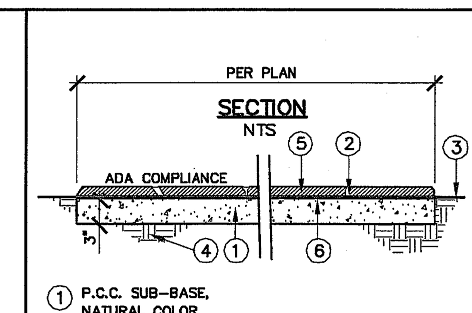

1. P.C.C. SUB-BASE, NATURAL COLOR
2. GROUTED JOINT. GROUT COLOR SHALL COMPLIMENT STONE COLOR
3. FINISHED GRADE
4. 95% COMPACTED SUBGRADE
5. 1-1/2 MINUS FLAGSTONE. REFER TO PLANS FOR STONE COLOR AND SIZE
6. 1/2" THIN SET MORTAR BED

NOTE
P.C.C. SUB-BASE SHALL BE 330-C-23 (560-C-3250) WITH A 4" MAX. SLUMP. FLY ASH SHALL NOT BE USED.

26 JOINT(S) CONSTRUCTION — NTS

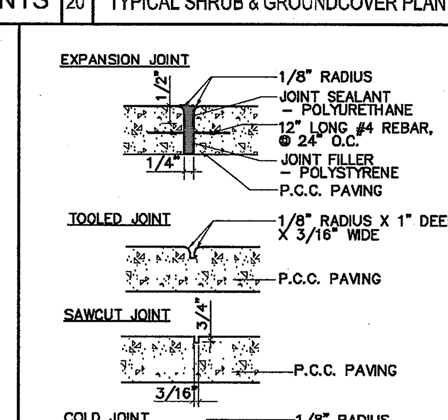

NOTE: TOP DRESS SEALANT WITH SILICA SAND. SEALANT COLOR TO MATCH ADJACENT CONCRETE COLOR.

27 DECORATIVE GARDEN RAILING — NTS

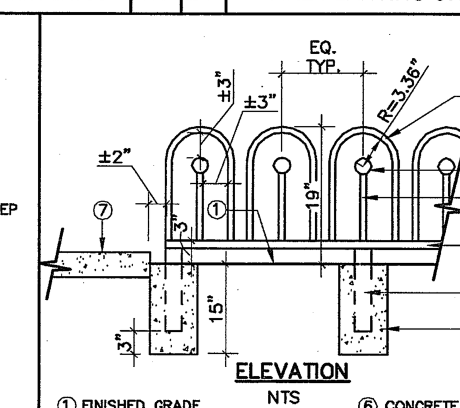

1. FINISHED GRADE
2. 3/4" SQ. TUBULAR STEEL PICKETS
3. 1-3/4" DIA. STEEL SPHERE
4. 1" X 2" TUBULAR STEEL BOTTOM RAIL
5. 2" SQ. TUBULAR STEEL POST (AT CORNERS & SPACE EQUALLY 2'-6" MAX. O.C.)
6. CONCRETE FOOTING
7. ADJACENT CONCRETE WALK OR CURB

NOTES:

1. ALL JOINTS & JOINS SHALL BE CONTINUOUSLY WELDED- GRIND ALL WELDS SMOOTH. ALL WELDS AND ABRASIONS SHALL BE METALIZED PER SEC. 210-3.5.2 OF THE S.P.P.W.C. "GREENBOOK", 2006 EDITION.
2. THE INTENT OF THIS DRAWING IS TO SHOW DESIGN CONCEPT ONLY. CONTRACTOR IS TO PROVIDE SHOP DRAWINGS TO THE ENGINEER FOR APPROVAL.
3. ALL STEEL RAIL COMPONENTS SHALL RECEIVE (1) COAT OF PRIMER AND (2) COATS OF GLOSS GREEN RUSTOLEUM. VERIFY COLOR WITH ENGINEER PRIOR TO PAINTING.
4. RAILING PANEL SHALL BE INSTALLED PARALLEL TO FINISHED GRADE- POSTS SHALL BE PLUMBED VERTICAL.
5. P.C.C. FOR CONCRETE FOOTING SHALL BE 330-C-23 (560-C-3250) WITH A 4" MAX. SLUMP. FLY ASH SHALL NOT BE USED.

28 HORSESHOE COURT — NTS

1. 2X2 RECYCLED PLASTIC LUMBER, COLOR: WHITE MANUF: TREX OR EQUAL
2. 2X6 RECYCLED PLASTIC LUMBER, COLOR: RED FOR FOUL LINE, WHITE FOR BACKBOARD MANUF: TREX OR EQUAL
3. 1X2, 12 GA. HOT-DIP GALVANIZED STEEL TUBE
4. 6" DIA. X 12" CONCRETE FOOTING
5. ½" DIA. HOT-DIP GALV. CARRIAGE BOLT ASSEMBLY LENGTH AS REQUIRED
6. 6" DEPTH X 18" WIDE P.C.C. SLAB
7. #3 REBAR
8. WHITE PLAYSAND
9. POTTER'S CLAY, BLUE CLAY OR SYNTHETIC CLAY
10. 10X10X10 PRESSURE TREATED OAK BLOCK
11. 1" DIA. X 30" LONG COLD ROLLED STEEL STAKE
12. FILTER FABRIC
13. FINISHED GRADE
14. NATIVE SUBGRADE

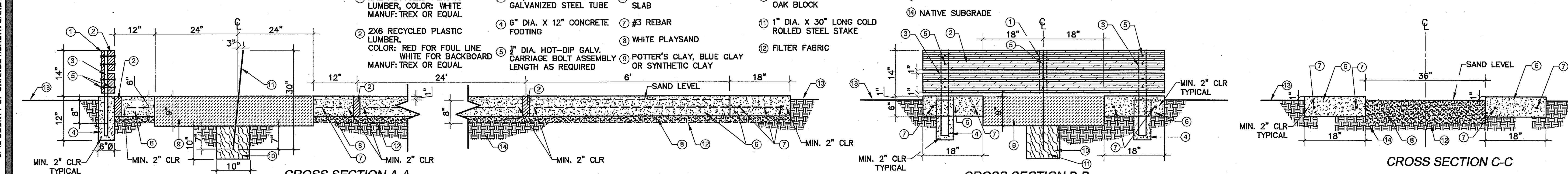

NOTES

1. CONTRACTOR SHALL SUBMIT SAMPLES OR MANUF'S CUT SHEETS OF RECYCLED PLASTIC LUMBER, PLAYSAND, CLAY AND PRESSURE TREATED LUMBER TO ENGINEER FOR APPROVAL PRIOR TO CONSTRUCTION.
2. VERIFY HORSESHOE COURT LAYOUT WITH ENGINEER PRIOR TO CONSTRUCTION.
3. COUNTERSINK CARRIAGE BOLT ASSEMBLIES INTO RECYCLED PLASTIC LUMBER. SPACE BOLTS EQUALLY ON CENTER.
4. P.C.C. FOR CONCRETE SLAB AND FOOTING SHALL BE 330-C-23 (560-C-3250) WITH A 4" MAX. SLUMP. FLY ASH SHALL NOT BE USED.
5. WHITE PLAYSAND AVAILABLE @ http: //safesand.stores.yahoo.net/index.html

29 GREENSCREEN — NTS

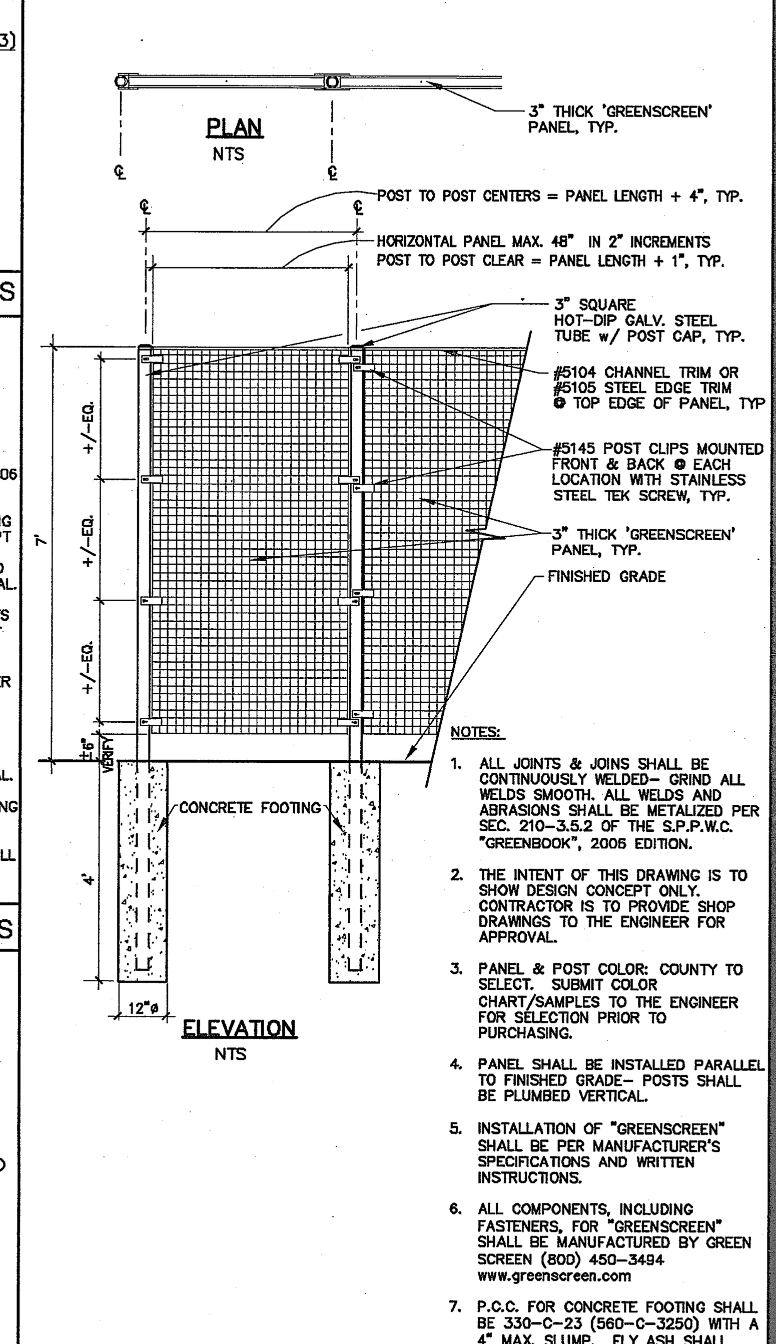

NOTES:

1. ALL JOINTS & JOINS SHALL BE CONTINUOUSLY WELDED- GRIND ALL WELDS SMOOTH. ALL WELDS AND ABRASIONS SHALL BE METALIZED PER SEC. 210-3.5.2 OF THE S.P.P.W.C. "GREENBOOK", 2006 EDITION.
2. THE INTENT OF THIS DRAWING IS TO SHOW DESIGN CONCEPT ONLY. CONTRACTOR IS TO PROVIDE SHOP DRAWINGS TO THE ENGINEER FOR APPROVAL.
3. PANEL & POST COLOR: COUNTY TO SELECT. SUBMIT COLOR CHART/SAMPLES TO THE ENGINEER FOR SELECTION PRIOR TO PURCHASING.
4. PANEL SHALL BE INSTALLED PARALLEL TO FINISHED GRADE- POSTS SHALL BE PLUMBED VERTICAL.
5. INSTALLATION OF "GREENSCREEN" SHALL BE PER MANUFACTURER'S SPECIFICATIONS AND WRITTEN INSTRUCTIONS.
6. ALL COMPONENTS, INCLUDING FASTENERS, FOR "GREENSCREEN" SHALL BE MANUFACTURED BY GREEN SCREEN (800) 450-3494 www.greenscreen.com
7. P.C.C. FOR CONCRETE FOOTING SHALL BE 330-C-23 (560-C-3250) WITH A 4" MAX. SLUMP. FLY ASH SHALL NOT BE USED.

County of Orange
OC PUBLIC WORKS
Architecture & Engineering

Revisions: 0742 — REVISED PER IRWD PLAN CHECK COMMENTS — 08/29/08 — BN
Sym. | Descrip. | Date | By

Consultants: WILLDAN Landscape Architecture — extending your reach
Drawn BN — Chkd. JH — Date 11-26-09

A-E Seal: REGISTERED LANDSCAPE ARCHITECT — JOHN HIDALGO — No. 3551 — Exp. 7-31-11 — STATE OF CALIFORNIA

A-E: ALEXANDER + HIBBS, AIA, INC.
ALEXANDER + HIBBS, AIA, INC. Architecture and Planning, 1200 N. JEFFERSON ST. SUITE A, ANAHEIM, CALIFORNIA 92807, (714) 630-3666
Design — Chkd. — Date NOV. 26, 2009

Sht Title: LANDSCAPE CONSTRUCTION DETAILS
Project: COUNTY OF ORANGE HEALTH CARE AGENCY 401 SOUTH TUSTIN STREET
401 SOUTH TUSTIN STREET ORANGE, CA 92866
PROJ. NO. 100-042-P210-4200

Plan No. 52333-03608

Sheet L-4

Directory Path: S:\jn17531 401 Tustin Wellness Center\Landscape Dwgs\401-Landscape Details.dwg, Date: 11/12/09

0742 COUNTY OF ORANGE HEALTH CARE AGENCY 401 SOUTH TUSTIN STREET