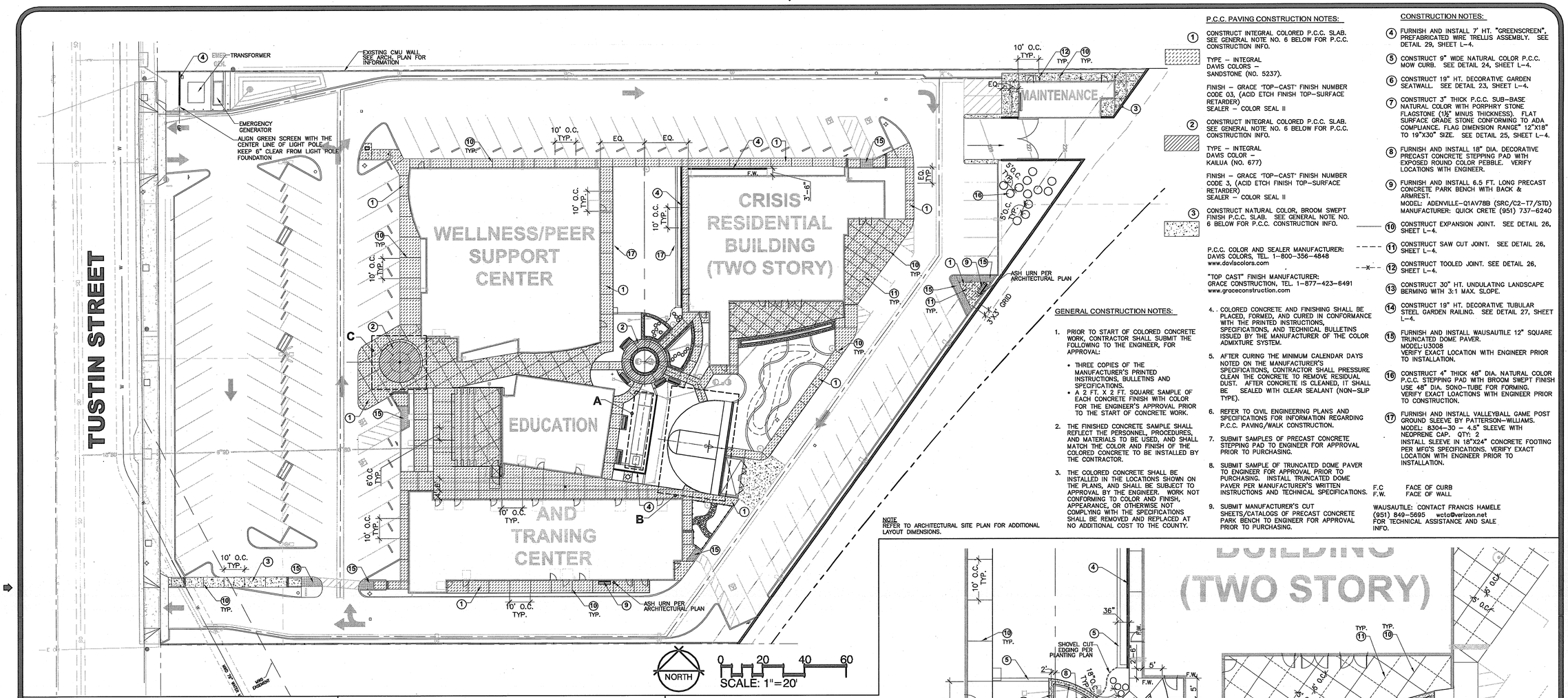

NOTE
REFER TO ARCHITECTURAL SITE PLAN FOR ADDITIONAL LAYOUT DIMENSIONS.

P.C.C. PAVING CONSTRUCTION NOTES:

1. CONSTRUCT INTEGRAL COLORED P.C.C. SLAB. SEE GENERAL NOTE NO. 6 BELOW FOR P.C.C. CONSTRUCTION INFO.

   TYPE – INTEGRAL
   DAVIS COLORS – SANDSTONE (NO. 5237).

   FINISH – GRACE "TOP-CAST" FINISH NUMBER CODE 03, (ACID ETCH FINISH TOP-SURFACE RETARDER)
   SEALER – COLOR SEAL II

2. CONSTRUCT INTEGRAL COLORED P.C.C. SLAB. SEE GENERAL NOTE NO. 6 BELOW FOR P.C.C. CONSTRUCTION INFO.

   TYPE – INTEGRAL
   DAVIS COLOR – KAILUA (NO. 677)

   FINISH – GRACE "TOP-CAST" FINISH NUMBER CODE 3, (ACID ETCH FINISH TOP-SURFACE RETARDER)
   SEALER – COLOR SEAL II

3. CONSTRUCT NATURAL COLOR, BROOM SWEPT FINISH P.C.C. SLAB. SEE GENERAL NOTE NO. 6 BELOW FOR P.C.C. CONSTRUCTION INFO.

P.C.C. COLOR AND SEALER MANUFACTURER:
DAVIS COLORS, TEL. 1-800-356-4848
www.daviscolors.com

"TOP CAST" FINISH MANUFACTURER:
GRACE CONSTRUCTION, TEL. 1-877-423-6491
www.graceconstruction.com

GENERAL CONSTRUCTION NOTES:

1. PRIOR TO START OF COLORED CONCRETE WORK, CONTRACTOR SHALL SUBMIT THE FOLLOWING TO THE ENGINEER, FOR APPROVAL:
   - THREE COPIES OF THE MANUFACTURER'S PRINTED INSTRUCTIONS, BULLETINS AND SPECIFICATIONS.
   - A 2 FT. X 2 FT. SQUARE SAMPLE OF EACH CONCRETE FINISH WITH COLOR FOR THE ENGINEER'S APPROVAL PRIOR TO THE START OF CONCRETE WORK.
2. THE FINISHED CONCRETE SAMPLE SHALL REFLECT THE PERSONNEL, PROCEDURES, AND MATERIALS TO BE USED, AND SHALL MATCH THE COLOR AND FINISH OF THE COLORED CONCRETE TO BE INSTALLED BY THE CONTRACTOR.
3. THE COLORED CONCRETE SHALL BE INSTALLED IN THE LOCATIONS SHOWN ON THE PLANS, AND SHALL BE SUBJECT TO APPROVAL BY THE ENGINEER. WORK NOT CONFORMING TO COLOR AND FINISH, APPEARANCE, OR OTHERWISE NOT COMPLYING WITH THE SPECIFICATIONS SHALL BE REMOVED AND REPLACED AT NO ADDITIONAL COST TO THE COUNTY.
4. COLORED CONCRETE AND FINISHING SHALL BE PLACED, FORMED, AND CURED IN CONFORMANCE WITH THE PRINTED INSTRUCTIONS, SPECIFICATIONS, AND TECHNICAL BULLETINS ISSUED BY THE MANUFACTURER OF THE COLOR ADMIXTURE SYSTEM.
5. AFTER CURING THE MINIMUM CALENDAR DAYS NOTED ON THE MANUFACTURER'S SPECIFICATIONS, CONTRACTOR SHALL PRESSURE CLEAN THE CONCRETE TO REMOVE RESIDUAL DUST. AFTER CONCRETE IS CLEANED, IT SHALL BE SEALED WITH CLEAR SEALANT (NON-SLIP TYPE).
6. REFER TO CIVIL ENGINEERING PLANS AND SPECIFICATIONS FOR INFORMATION REGARDING P.C.C. PAVING/WALK CONSTRUCTION.
7. SUBMIT SAMPLES OF PRECAST CONCRETE STEPPING PAD TO ENGINEER FOR APPROVAL PRIOR TO PURCHASING.
8. SUBMIT SAMPLE OF TRUNCATED DOME PAVER TO ENGINEER FOR APPROVAL PRIOR TO PURCHASING. INSTALL TRUNCATED DOME PAVER PER MANUFACTURER'S WRITTEN INSTRUCTIONS AND TECHNICAL SPECIFICATIONS.
9. SUBMIT MANUFACTURER'S CUT SHEETS/CATALOGS OF PRECAST CONCRETE PARK BENCH TO ENGINEER FOR APPROVAL PRIOR TO PURCHASING.

CONSTRUCTION NOTES:

4. FURNISH AND INSTALL 7' HT. "GREENSCREEN", PREFABRICATED WIRE TRELLIS ASSEMBLY. SEE DETAIL 29, SHEET L-4.
5. CONSTRUCT 9" WIDE NATURAL COLOR P.C.C. MOW CURB. SEE DETAIL 24, SHEET L-4.
6. CONSTRUCT 19" HT. DECORATIVE GARDEN SEATWALL. SEE DETAIL 23, SHEET L-4.
7. CONSTRUCT 3" THICK P.C.C. SUB-BASE NATURAL COLOR WITH PORPHRY STONE FLAGSTONE (1½" MINUS THICKNESS). FLAT SURFACE GRADE STONE CONFORMING TO ADA COMPLIANCE. FLAG DIMENSION RANGE" 12"X18" TO 19"X30" SIZE. SEE DETAIL 25, SHEET L-4.
8. FURNISH AND INSTALL 18" DIA. DECORATIVE PRECAST CONCRETE STEPPING PAD WITH EXPOSED ROUND COLOR PEBBLE. VERIFY LOCATIONS WITH ENGINEER.
9. FURNISH AND INSTALL 6.5 FT. LONG PRECAST CONCRETE PARK BENCH WITH BACK & ARMREST.
   MODEL: ADENVILLE-Q1AV78B (SRC/C2-T7/STD)
   MANUFACTURER: QUICK CRETE (951) 737-6240
10. CONSTRUCT EXPANSION JOINT. SEE DETAIL 26, SHEET L-4.
11. CONSTRUCT SAW CUT JOINT. SEE DETAIL 26, SHEET L-4.
12. CONSTRUCT TOOLED JOINT. SEE DETAIL 26, SHEET L-4.
13. CONSTRUCT 30" HT. UNDULATING LANDSCAPE BERMING WITH 3:1 MAX. SLOPE.
14. CONSTRUCT 19" HT. DECORATIVE TUBULAR STEEL GARDEN RAILING. SEE DETAIL 27, SHEET L-4.
15. FURNISH AND INSTALL WAUSAUTILE 12" SQUARE TRUNCATED DOME PAVER.
    MODEL: U3008
    VERIFY EXACT LOCATION WITH ENGINEER PRIOR TO INSTALLATION.
16. CONSTRUCT 4" THICK 48" DIA. NATURAL COLOR P.C.C. STEPPING PAD WITH BROOM SWEPT FINISH USE 48" DIA. SONO-TUBE FOR FORMING. VERIFY EXACT LOACTIONS WITH ENGINEER PRIOR TO CONSTRUCTION.
17. FURNISH AND INSTALL VALLEYBALL GAME POST GROUND SLEEVE BY PATTERSON-WILLIAMS.
    MODEL: 8304-30 – 4.5" SLEEVE WITH NEOPRENE CAP. QTY: 2
    INSTALL SLEEVE IN 18"X24" CONCRETE FOOTING PER MFG'S SPEOIFICATIONS. VERIFY EXACT LOCATION WITH ENGINEER PRIOR TO INSTALLATION.

F.C FACE OF CURB
F.W. FACE OF WALL

WAUSAUTILE: CONTACT FRANCIS HAMELE
(951) 849-5695 wcta@verizon.net
FOR TECHNICAL ASSISTANCE AND SALE INFO.

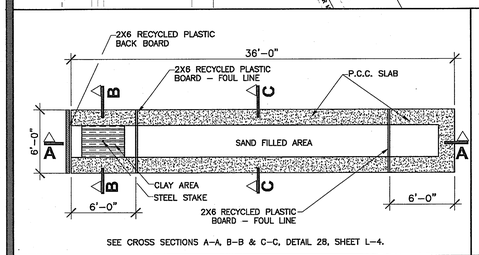

SEE CROSS SECTIONS A–A, B–B & C–C, DETAIL 28, SHEET L–4.

A HORSESHOE COURT LAYOUT not to scale

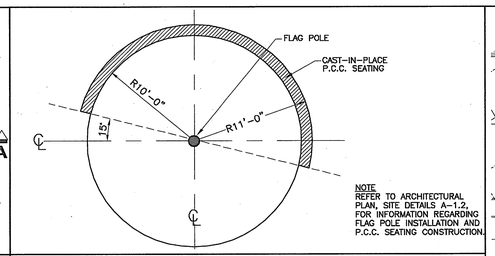

NOTE
REFER TO ARCHITECTURAL PLAN, SITE DETAILS A–1.2, FOR INFORMATION REGARDING FLAG POLE INSTALLATION AND P.C.C. SEATING CONSTRUCTION.

B FLAG POLE not to scale

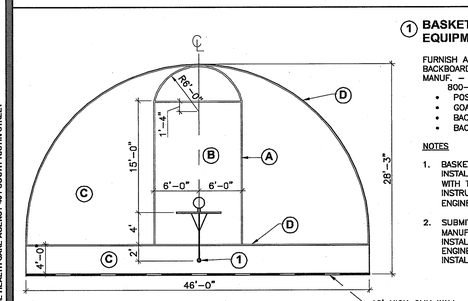

① BASKETBALL COURT EQUIPMENT

FURNISH AND INSTALL BASKETBALL POLE, BACKBOARD, AND GOAL RING.
MANUF. – PATTERSON WILLIAMS
800-687-5768
- POST – MODEL # 1560
- GOAL RING – MODEL # 41
- BACKBOARD – MODEL # 20
- BACKBOARD TARGET – MODEL # 28

NOTES
1. BASKETBALL APPARATUS SHALL BE INSTALLED IN STRICT CONFORMANCE WITH THE MANUFACTURER'S PRINTED INSTRUCTIONS, THE PLANS AND ENGINEER'S INSTRUCTIONS.
2. SUBMIT THREE (3) COPIES OF MANUFACTURER'S CATALOG CUTS AND INSTALLATION INSTRUCTIONS TO ENGINEER FOR APPROVAL PRIOR TO INSTALLATION.

BASKETBALL COURT SURFACING

BASKETBALL COURT SURFACING. PAINT SYSTEM FOR BASKETBALL COURT SHALL BE HEAVY-DUTY ACRYLIC LATEX SYSTEM, "PLEXIPAVE SYSTEM (CALIFORNIA SPORT SURFACING SECTION 10.19 SPECIFICATIONS)". CALIFORNIA PRODUCTS CORPORATION (978) 623-9980. WWW.PLEXIPAVE.COM

COLOR SHALL BE: COURT SURFACE: SEE COURT STRIPING BELOW
STRIPING: SEE COURT STRIPING BELOW
FREE THROW LANE/KEY AREA: SEE COURT STRIPING BELOW

ALL COURT SURFACE PRODUCTS SHALL BE OF ONE MANUFACTURER.

1. EXPANSION JOINT FILLER – ELASTOMERIC JOINT MATERIAL
2. DEPRESSION, IRREGULARITIES LEVELER – PLEXIPAVE COURT PATCH BINDER
3. RE-SURFACER – PLEXIPAVE ACRYLIC RESURFACER
4. TOP COAT – PLEXIPAVE PLEXICHROME AND COLOR BASE (TEXTURED PLAYING SURFACE)
5. LINE PAINT – PLEXICOLOR (TEXTURED LINE PAINT)
6. CONCRETE PREPARER
7. CONCRETE TI-COAT

THE COURT SURFACING MANUFACTURER'S WRITTEN SPECIFICATION FOR APPLICATION IS DEEMED AND CONSTRUED AS PART OF THIS SPECIFICATION.

COURT STRIPING

(A)	COLOR: WHITE	SIZE: 2" WIDE
(B)	COLOR: PLEXIPAVE-SUDBURY SAND	KEY/CENTER COURT ONLY
(C)	COLOR: PLEXIPAVE-LIGHT GREY	
(D)	COLOR: WHITE	SIZE: 2" WIDE

C BASKETBALL COURT LAYOUT not to scale

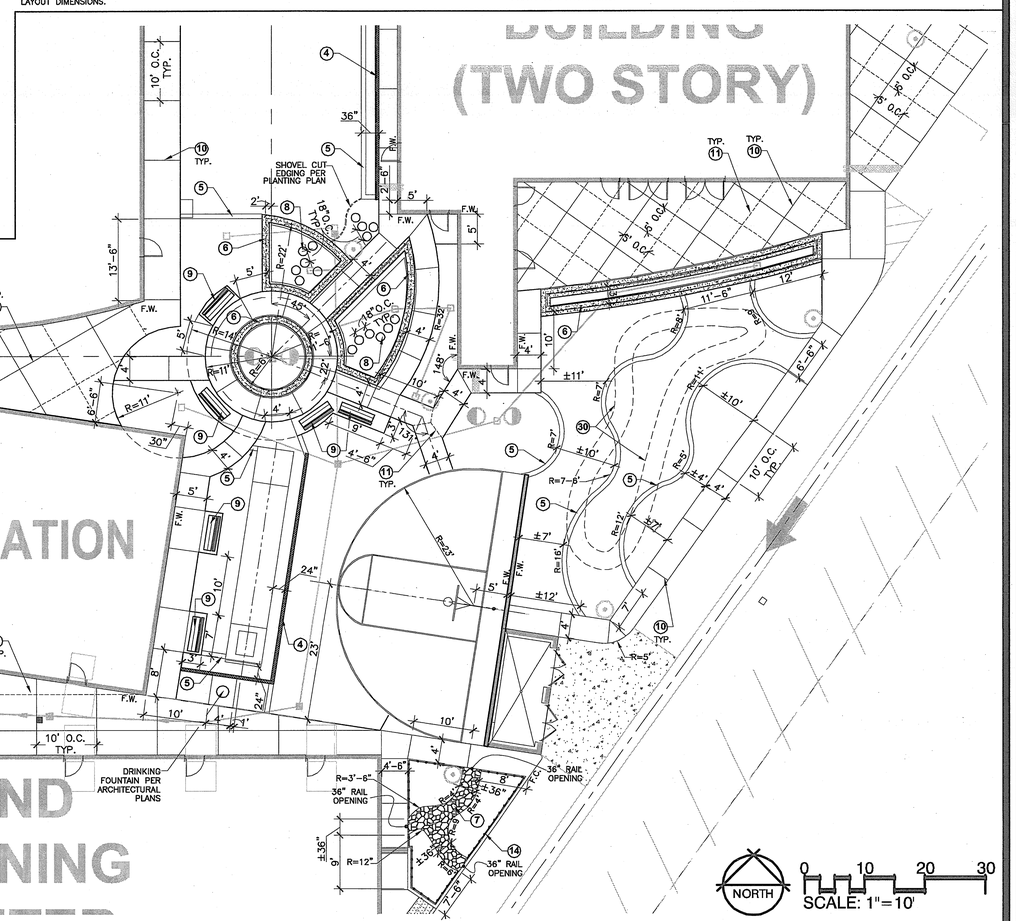

ENLARGED CENTRAL PLAZA LAYOUT

DIGALERT
DIAL/LOG-ON BEFORE YOU DIG
2 WORKING DAYS BEFORE YOU DIG
www.digalert.org
DIAL: 811
A PUBLIC SERVICE BY UNDERGROUND SERVICE ALERT

811 Know what's below. Call before you dig.

County of Orange
OC PUBLIC WORKS
Architecture & Engineering

Revisions

Sym.	Descrip.	Date	By

Consultants
WILLDAN Landscape Architecture — enhancing your reach

Drawn	Chkd.	Date
BN	JH	11-26-09

A-E Seal
No. 3551 Exp. 7-31-11 — STATE OF CALIFORNIA — REGISTERED PROFESSIONAL ENGINEER

A-E ALEXANDER + HIBBS, AIA, INC.
ALEXANDER HIBBS AIA INC
ARCHITECTS AND PLANNERS
1300 N. ORTANGE ST., SUITE A
ORANGE, CALIFORNIA 92867
(714) 637-3366

Design	Chkd.	Date
		NOV. 28, 2009

Sht Title HARDSCAPE CONSTRUCTION PLAN
Project COUNTY OF ORANGE HEALTH CARE AGENCY
401 SOUTH TUSTIN STREET
401 SOUTH TUSTIN STREET
ORANGE, CA 92866
PROJ. NO. 100-042-P210-4200

Plan No. 52333-03608

Sheet L-1

0742 COUNTY OF ORANGE HEALTH CARE AGENCY 401 SOUTH TUSTIN STREET

Directory Path: S:\jn17531 401 Tustin Wellness Center\Landscape Dwgs\A01-Hardscape.dwg, Date: 11/12/09